18W2001 8Ω

LF drivers - 18.0 Inches

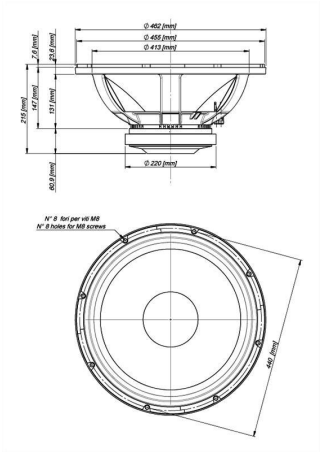

- 99 dB SPL 1W / 1m average sensitivity
- 100 mm (4 in) Interleaved Sandwich ISV copper voice coil
- 1200 W AES power handling
- Double Silicon Spider (DSS) for improved excursion control and linearity
- Improved heat dissipation via unique basket design and multi-cell air diffractor
- Weather protected cone and plates for outdoor usage
- Suitable for high SPL subwoofer designs

The 18W2001 is the updated version of the classic 18W2000, a low frequency subwoofer which sets a benchmark in 18" (460 mm) high output transducers. Showing 20% higher power handling and 10% lower weight, it represents a significative development of the acclaimed 18W1000 model. The 18W2001 can be used as a low bass or subwoofer component in either a reflex, bandpass or horn loaded configuration. It provides clean, linear, undistorted low frequency reproduction at very high power levels. The high excursion capabilities of the surround and suspension system, in conjunction with the Double Silicon Spider (DSS), enable the 18W2001 to achieve high levels of linear travel while maintaining full control of the moving mass. The high quality curvilinear cone assures smooth response and exceptional strength with maximum reliability under high mechanical stress. The 100mm diameter copper wire voice coil employs the Interleaved Sandwich Voice coil (ISV) technology, in which a high strength fiberglas former carries windings on both the outer and inner surfaces to achieve a balanced coil with a uniform distribution of mass and motive energy. This results in an extremely linear motor assembly. Maximum flux concentration and force factor in the gap is assured by the unique shape and design of the top and back plates, which have been researched and designed using our in-house magnetic flux FEA CAD resource. 18W2001 uses the voice coil ventilation technology developed for our flagship 9000 neodymium transducer series. A special low density multi-cell material air diffractor has been placed into the backplate acting as a cooling system, increasing power handling capability and lowering the power compression figure. As a final result Eighteen Sound engineers obtained almost 1 dB reduction in full power power compression value if compared to 18LW1400, and an increased program power handling value of 2400 Watt. 18W2001 is able to perform in adverse weather conditions or in areas of high humidity. This key feature has been achieved using an exclusive water repellent cone treatment and magnetic plate coating which resists against environmental corrosion.

Eighteen Sound Srl
Via Botticelli 8 - 42124 Mancasale (RE) - ITALY - Ph. +39 0522 1861800 - Fax +39 0522 1861801 - info@eighteensound.it

18W2001 8Ω

LF drivers - 18.0 Inches

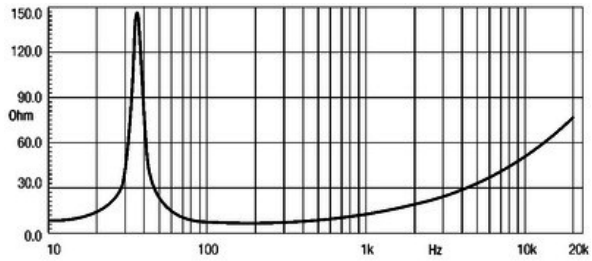

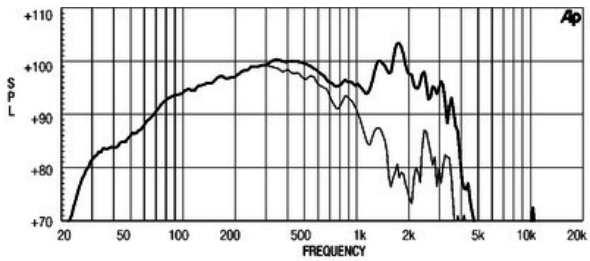

SPECIFICATIONS

Nominal Diameter	460 mm (in)
Nominal Impedance	8 Ω
Minimum Impedance	7.3 Ω
Nominal Power Handling[1]	1200 W
Continuous Power Handling[2]	2400 W
Sensitivity[3]	99.0 dB
Frequency Range	37 - 3000 Hz
Voice Coil Diameter	100 mm (4.0 in)

DESIGN

Magnet Material	Ferrite
Recommended Enclosure	200.0 dm^3 (7.06 ft^3)
Recommended Tuning	42 Hz

PARAMETERS[4]

Resonance Frequency	37 Hz
Re	5.8 Ω
Qes	0.26
Qms	7.29
Qts	0.25
Vas	230.0 dm^3 (ft^3)
Sd	1134.0 cm^2 (175.77 in^2)
Xmax	7.0 mm
Mms	143.0 g
Bl	27.1 Txm
Le	1.9 mH
EBP	142 Hz

MOUNTING AND SHIPPING INFO

Overall Diameter	462 mm (in)
Bolt Circle Diameter	438 mm (in)
Baffle Cutout Diameter	416.0 mm (in)
Depth	205 mm (in)
Flange and Gasket Thickness	19 mm (in)
Net Weight	11.5 kg (lb)
Shipping Weight	13.0 kg (lb)
Shipping Box	482 x 482 x 257 mm (18.98x18.98x10.12 in)

SERVICE KIT

0271882010

1. 2 hours test made with continuous pink noise signal within the range Fs-10Fs. Power calculated on rated minimum impedance. Loudspeaker in free air.
2. Power on Continuous Program is defined as 3 dB greater than the Nominal rating.
3. Applied RMS Voltage is set to 2.83 V for 8 ohms Nominal Impedance.
4. Thiele-Small parameters are measured after a high level 20 Hz sine wave preconditioning test.

Eighteen Sound Srl
Via Botticelli 8 - 42124 Mancasale (RE) - ITALY - Ph. +39 0522 1861800 - Fax +39 0522 1861801 - info@eighteensound.it